International Journal of Scientific Research in Engineering & Technology
Volume6, Issue4 (July-August 2026), PP: 55-64.
https://www.doi.org/10.59256/ijsreat.20260604006
www.ijsreat.com
ISSN No: 2583-1240

Design and Simulation of a Smart Waste Management and Energy Recovery System Using PLC and SCADA

K. Rajesh Kumar[1], Duri Anvitha[2], Ogirala Vinay[3], Tentu Sai Ganesh[4], Poliparthi Ritesh Kumar[5], Kalahasthi Rohith[6]

[1]Assistant Professor, Department of Electronics and Communication Engineering, Dr. Lankapalli Bullayya College of Engineering, Visakhapatnam, Andhra Pradesh, India.
[2,3,4,5,6]Department of Electronics and Communication Engineering, Dr. Lankapalli Bullayya College of Engineering, Visakhapatnam, Andhra Pradesh, India.

To Cite this Article: *K. Rajesh Kumar[1], Duri Anvitha[2], Ogirala Vinay[3], Tentu Sai Ganesh[4], Poliparthi Ritesh Kumar[5], Kalahasthi Rohith[6], "Design and Simulation of a Smart Waste Management and Energy Recovery System Using PLC and SCADA", International Journal of Scientific Research in Engineering & Technology, Volume 06, Issue 04, July-August 2026, PP:55-64.*

Copyright: ©2026 This is an open access journal, and articles are distributed under the terms of the Creative Commons Attribution License; Which Permits unrestricted use, distribution, and reproduction in any medium, provided the original author and source are credited.

Abstract: *The increasing generation of municipal solid waste due to rapid urbanization has created significant environmental and operational challenges for conventional waste management systems. Traditional methods often depend on manual segregation and monitoring, resulting in inefficient processing, higher operational costs, and poor resource utilization. The objective of this project is to design and simulate a Smart Waste Management and Energy Recovery System using Programmable Logic Controller (PLC) and Supervisory Control and Data Acquisition (SCADA) technologies to automate waste segregation, monitoring, and resource recovery. The proposed system classifies waste into wet, dry, and liquid categories using sensor-based detection. PLC ladder logic controls conveyors, pumps, valves, and processing units, while the WinCC SCADA interface provides real-time monitoring, process visualization, alarm management, and supervisory control. Wet waste is processed through anaerobic digestion for biogas generation, dry waste is directed for recycling, and liquid waste undergoes treatment before safe reuse or disposal. The system was designed and validated through PLC programming and SCADA simulation, demonstrating reliable automated operation, improved process monitoring, reduced manual intervention, and efficient utilization of waste resources. The proposed system provides a scalable, sustainable, and cost-effective solution suitable for smart cities, educational institutions, industries, and commercial facilities.*

Key Word: *PLC, SCADA, Smart Waste Management, Industrial Automation, Waste Segregation, Biogas Generation, Recycling, Energy Recovery.*

I. INTRODUCTION

The rapid growth of urbanization and industrialization has resulted in a significant increase in municipal solid waste generation, creating serious environmental and public health concerns. Traditional waste management systems mainly depend on manual segregation, transportation, and disposal, which often lead to inefficient processing, increased operational costs, poor recycling efficiency, and environmental pollution. To address these challenges, intelligent and automated waste management systems have become essential for ensuring sustainable waste processing and resource utilization.

Programmable Logic Controllers (PLCs) and Supervisory Control and Data Acquisition (SCADA) systems are widely used in industrial automation due to their reliability, flexibility, and real-time control capabilities. PLCs perform sequential control of industrial equipment such as conveyors, pumps, motors, and valves, while SCADA provides centralized monitoring, graphical visualization, alarm handling, and process supervision. The integration of these technologies enables continuous monitoring, accurate process control, and reduced human intervention.

The main objective of this project is to design and simulate a Smart Waste Management and Energy Recovery System using PLC and SCADA technologies. The proposed system automates the segregation of waste into wet, dry, and liquid categories using sensor-based detection. Dry waste is directed towards recycling units, wet waste is processed for biogas generation through anaerobic digestion, and liquid waste is treated before reuse or safe disposal. The PLC controls the complete sequence of operations through ladder logic programming, while the WinCC SCADA interface provides real-time visualization and monitoring of the entire process.

The proposed system demonstrates the effective application of industrial automation in waste management by improving process efficiency, reducing manual labour, supporting renewable energy generation, and promoting environmentally sustainable waste processing. The simulation-based implementation also provides a scalable solution suitable for educational institutions, industries, commercial buildings, and future smart city applications.

II.MATERIAL AND METHODS

The proposed Smart Waste Management and Energy Recovery System was designed and simulated using industrial automation software and control components. The major materials and software used are listed below.

1. Siemens PLC (S7-1200 Series)
A Siemens S7-1200 PLC was used to implement the control logic of the waste management process. The PLC executes ladder logic instructions to control conveyors, pumps, valves, and other process operations based on sensor inputs.

2. WinCC SCADA
WinCC SCADA software was used to develop the Human Machine Interface (HMI) for real-time monitoring and visualization. The SCADA interface displays equipment status, process flow, alarms, and operational parameters.

3. Sensors (Simulated)
Various sensors were considered in the simulation to identify waste categories, monitor tank levels, and detect process conditions.
These sensor inputs were used by the PLC for automatic decision-making.

4. Conveyor System
A conveyor mechanism was incorporated in the system design to transport waste materials to different processing units according to the PLC control sequence.

5. Pumps and Control Valves
Pumps and electrically operated valves were used in the simulation for liquid waste transfer and treatment processes. Their operation was controlled automatically by the PLC.

6. Biogas Generation Unit (Proposed)
An anaerobic digestion unit was included in the system architecture to convert biodegradable wet waste into biogas for renewable energy generation.

7. Recycling Unit (Proposed)
The recycling section receives segregated dry waste such as plastic, paper, and metal for further processing and reuse.

8. Software Tools
- Siemens TIA Portal
- WinCC SCADA
- PLC Ladder Logic Programming Environment

Procedure Methodology

The proposed system was developed using PLC-based industrial automation and SCADA-based monitoring. Initially, waste materials were classified into wet, dry, and liquid categories using simulated sensor inputs. Based on these inputs, the Siemens PLC executed ladder logic instructions to control conveyors, pumps, and valves for directing waste to the appropriate processing units.

Dry waste was routed to the recycling section, while wet waste was transferred to the proposed biogas generation unit through automated conveyor control. Liquid waste was directed to a treatment section consisting of screening, sedimentation, filtration, biological treatment, and disinfection stages before reuse or safe discharge.

The PLC continuously monitored all sensor inputs and executed sequential control logic to ensure smooth system operation. The WinCC SCADA interface provided real-time graphical visualization of the complete process, including equipment status, process flow, alarm conditions, and operational parameters. The system was validated through PLC ladder logic execution and SCADA simulation, demonstrating reliable automation, centralized monitoring, and efficient waste processing.

III.SYSTEM IMPLEMENTATION

The system was implemented using Siemens PLC programming and SCADA simulation software. The PLC receives inputs from ultrasonic sensors, level sensors, and process monitoring devices. Based on programmed ladder logic, outputs are generated to operate conveyors, pumps, control valves, recycling units, and biogas processing equipment.

The SCADA interface displays:
- Waste segregation status
- Tank levels and conveyor operation
- Pump status and valve positions
- Alarm notifications
- Process flow visualization

- Biogas generation status

The operator can supervise the complete process from a centralized control screen, reducing manual intervention while improving system reliability. The modular architecture allows additional processing units to be integrated without major modifications to the existing control program.

3.1 Waste Separation Using Ultrasonic Sensor

The waste detection and segregation process is the primary stage of the proposed Smart Waste Management and Energy Recovery System. Efficient segregation of waste at the source is essential for improving recycling efficiency, reducing landfill waste, and enabling proper treatment of different waste categories. In the proposed system, an ultrasonic sensor is installed at the waste separation chamber to continuously detect the presence and accumulation of incoming waste materials. The sensor measures the waste level and transmits real-time data to the Siemens PLC, enabling automatic monitoring of the waste collection chamber.

The PLC continuously scans the sensor inputs and executes the programmed ladder logic to determine the operating sequence. Based on the predefined control conditions, the system classifies the incoming waste into wet and dry categories. When wet waste is detected, the PLC activates the corresponding conveyor mechanism and directs the waste toward the organic waste processing unit. Similarly, dry waste is automatically transferred to the dry waste processing section for further classification. The automation of this stage minimizes manual handling, reduces processing time, and improves the overall efficiency of the waste management process.

The complete segregation process is monitored using the WinCC SCADA interface. The graphical interface displays the operational status of sensors, conveyors, motors, and processing units in real time. Any abnormal conditions, such as sensor malfunction or conveyor failure, can be identified immediately through SCADA alarms, enabling quick corrective action and improving system reliability.

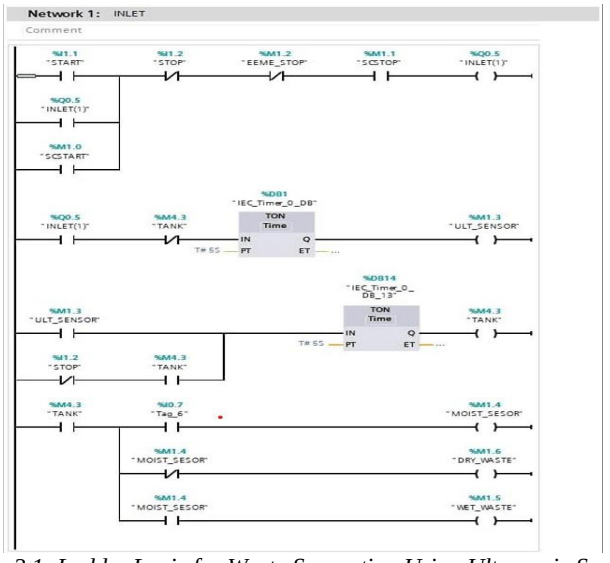

Fig. 3.1: Ladder Logic for Waste Separation Using Ultrasonic Sensor

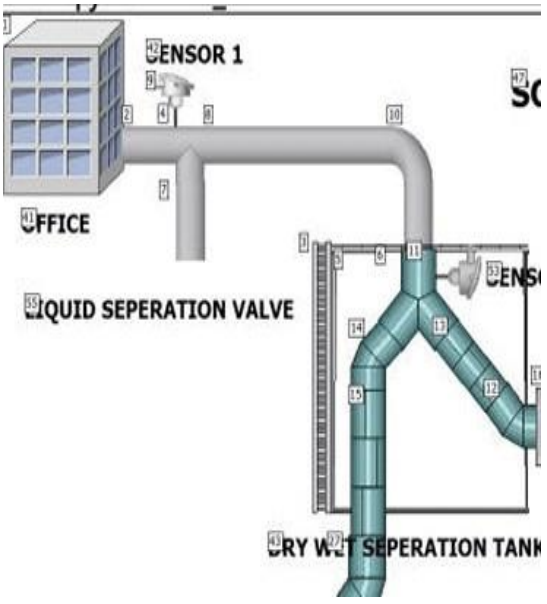

Fig. 3.2: SCADA Visualization for Waste Separation Using Ultrasonic Sensor

3.2 Dry Waste Separation

After the initial segregation process, dry waste is transferred to a dedicated processing section for further classification. Capacitive sensors are employed to detect non-metallic materials such as plastic, while inductive sensors are used to identify metallic objects. The PLC continuously evaluates the sensor signals and executes ladder logic instructions to control conveyor movement and waste routing. Based on the detected material type, the system directs plastic, paper, and metal waste into their respective collection bins for recycling. The automated classification process improves recycling efficiency and minimizes contamination between different waste categories. Throughout the operation, the SCADA system provides real-time visualization of sensor status, conveyor movement, waste classification, actuator operation, and collection bin status, allowing operators to monitor the complete process from a centralized interface.

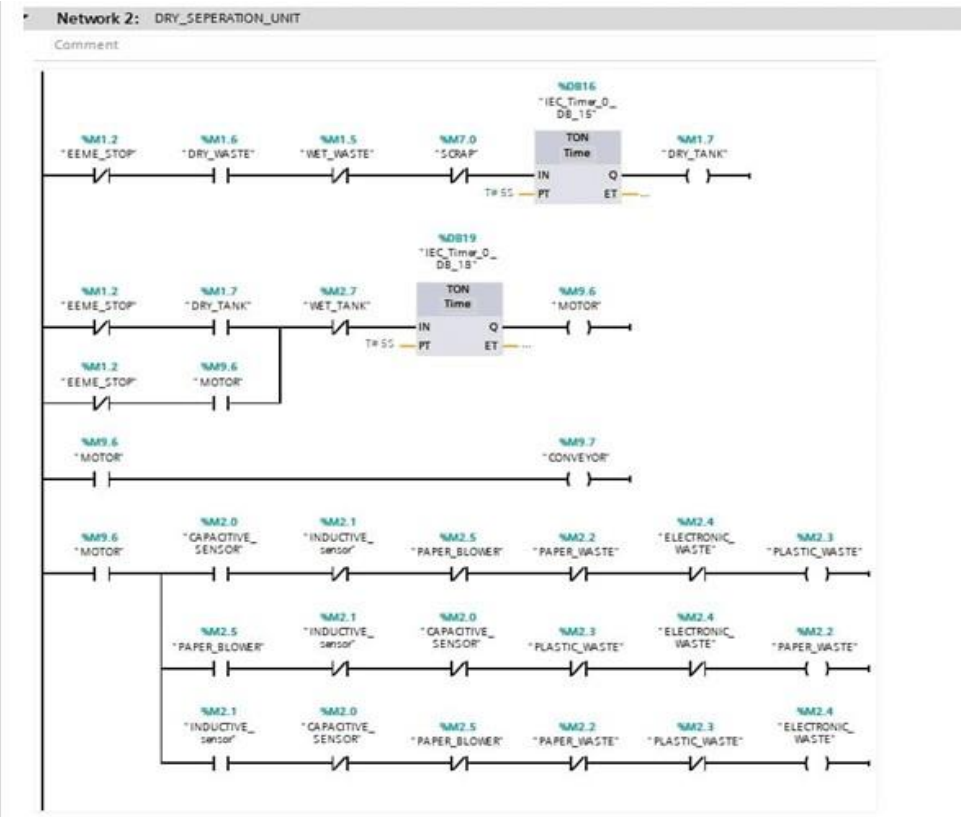

Fig. 3.3: Ladder Logic for Dry Waste Separation

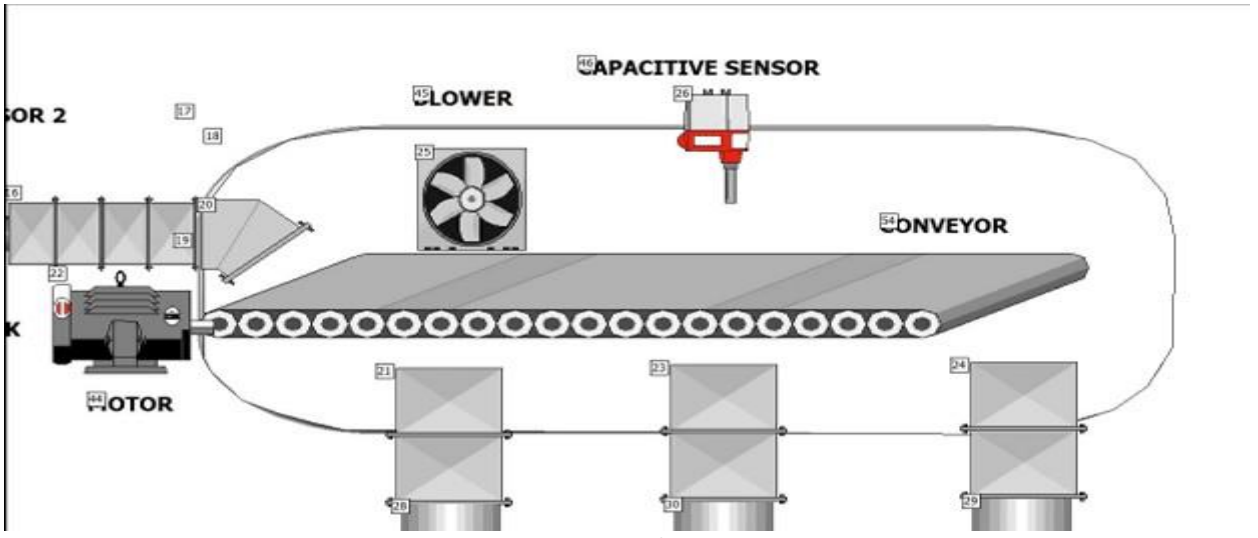

Fig. 3.4: SCADA Visualization for Dry Waste Separation

3.3 Wet Waste and Biogas Processing

Organic wet waste undergoes anaerobic digestion inside a sealed digester. Microorganisms break down the organic matter in the absence of oxygen, producing methane-rich biogas. The PLC controls the transfer of wet waste to the anaerobic digestion unit and monitors the operational sequence. The biogas generation process is represented in the simulation as a proposed energy recovery stage. SCADA displays process parameters including waste level, gas production rate, and system status.

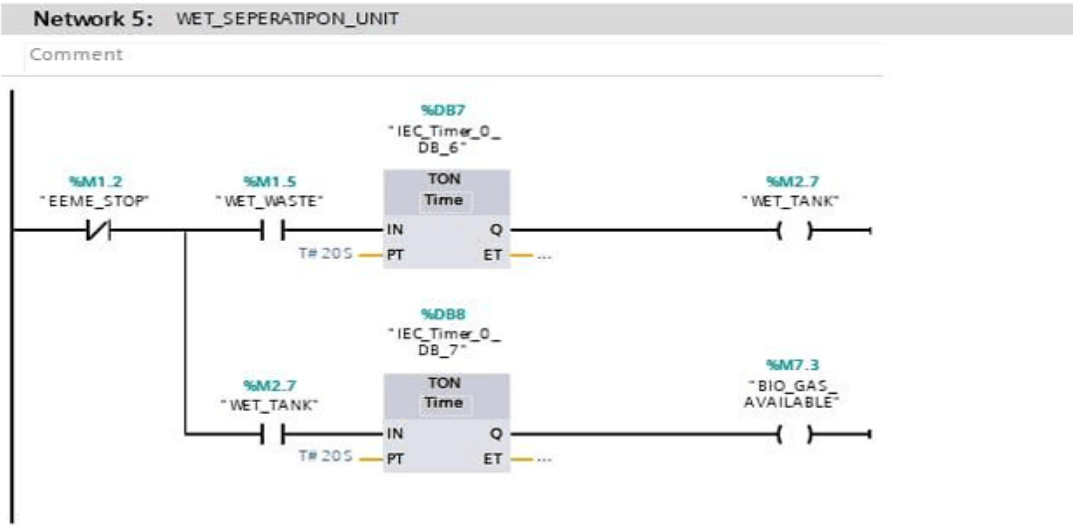

Fig. 3.5: Ladder Logic for Wet Waste Separation

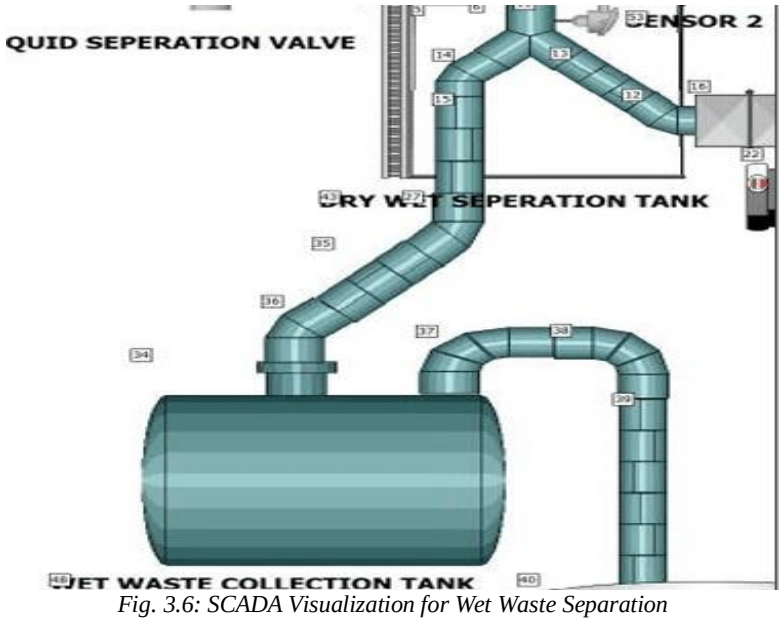

Fig. 3.6: SCADA Visualization for Wet Waste Separation

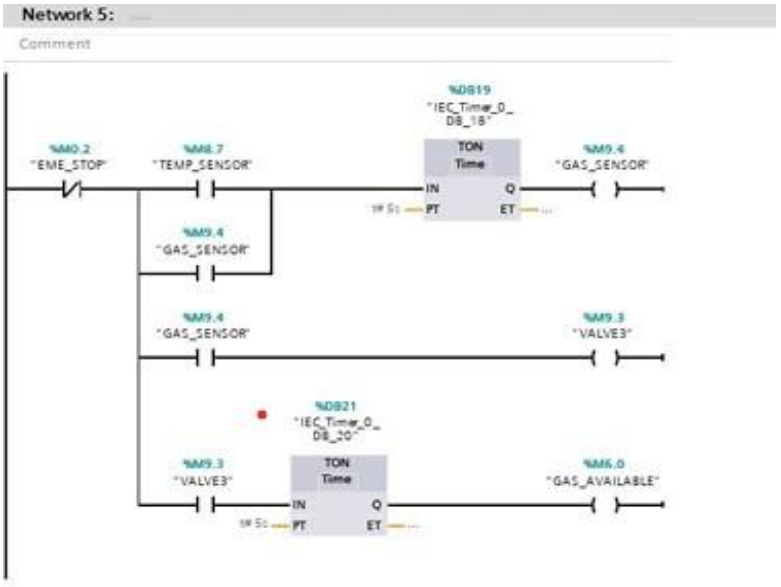

Fig.3.7: Ladder Logic for Biogas Generation

Fig. 3.8: SCADA Visualization for Biogas Collection Tank

3.4 Liquid Waste Treatment

Liquid waste generated from domestic and industrial activities contains suspended solids, organic contaminants, oils, grease, and harmful microorganisms that require proper treatment before disposal or reuse. The proposed system incorporates a compact multistage liquid waste treatment process controlled by the PLC and monitored through SCADA.

Initially, wastewater enters the screening chamber, where large solid particles and floating debris are removed. The screened water then flows into the sedimentation tank, allowing suspended solids to settle naturally under gravity. Following sedimentation, the wastewater passes through an oil separation unit where floating oil and grease are removed from the water surface.

The partially treated water is then filtered through multiple filtration layers consisting of sand and activated carbon. These filters remove fine suspended particles, reduce turbidity, eliminate unpleasant odours, and improve overall water quality. After filtration, the water undergoes biological treatment using aerobic and anaerobic microorganisms to decompose dissolved organic pollutants.

Finally, the treated water passes through a disinfection stage where harmful bacteria, viruses, and other microorganisms are eliminated before the water is safely discharged or reused for non-potable purposes. Throughout the treatment process, the PLC controls pumps, valves, and flow control devices while maintaining the correct operational sequence.

The SCADA interface provides continuous monitoring of process parameters such as tank levels, pump operation, valve status, flow conditions, and treatment stages. This automated control strategy improves treatment efficiency, reduces operational errors, and ensures reliable system performance.

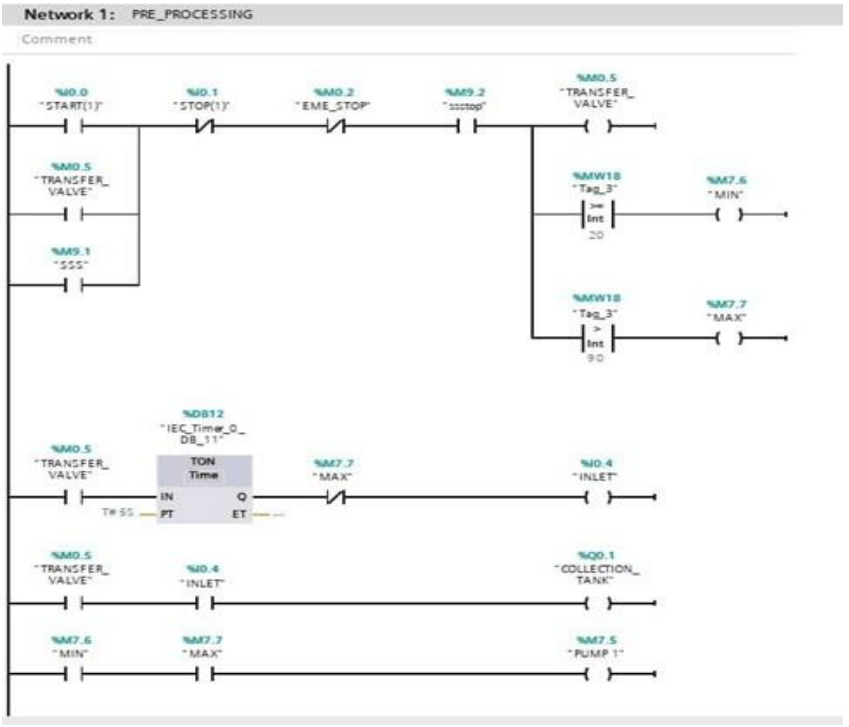

Fig. 3.9: Ladder Logic for Liquid Acquisition and Screening

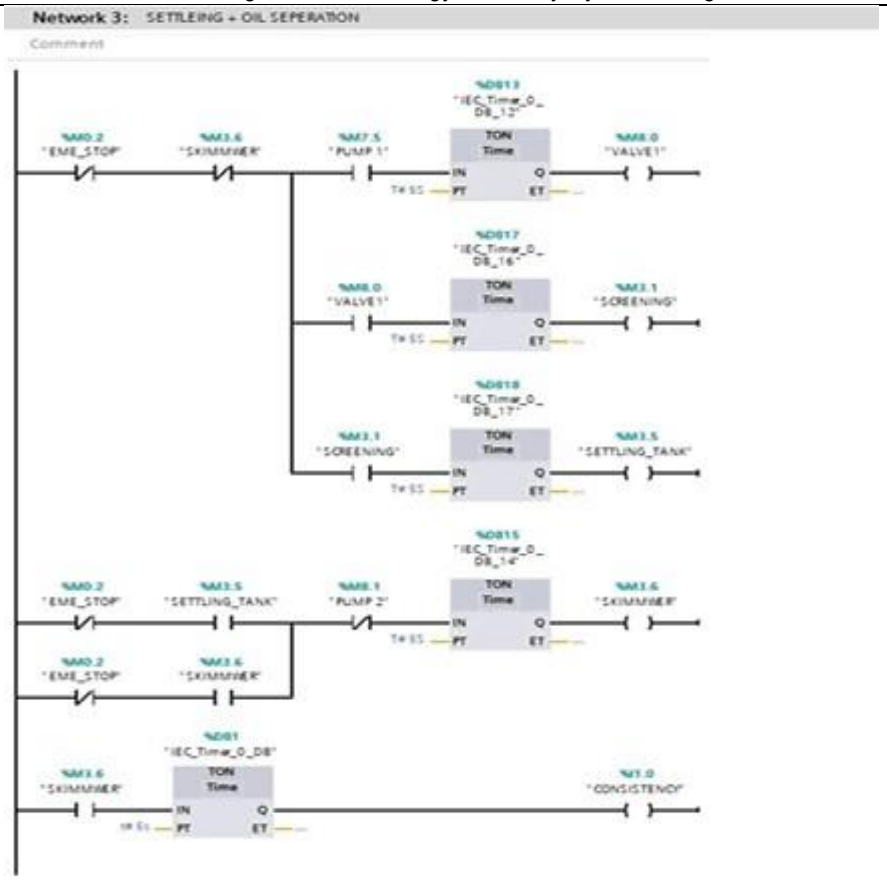

Fig. 3.10: Ladder Logic for Settling and Oil Separation

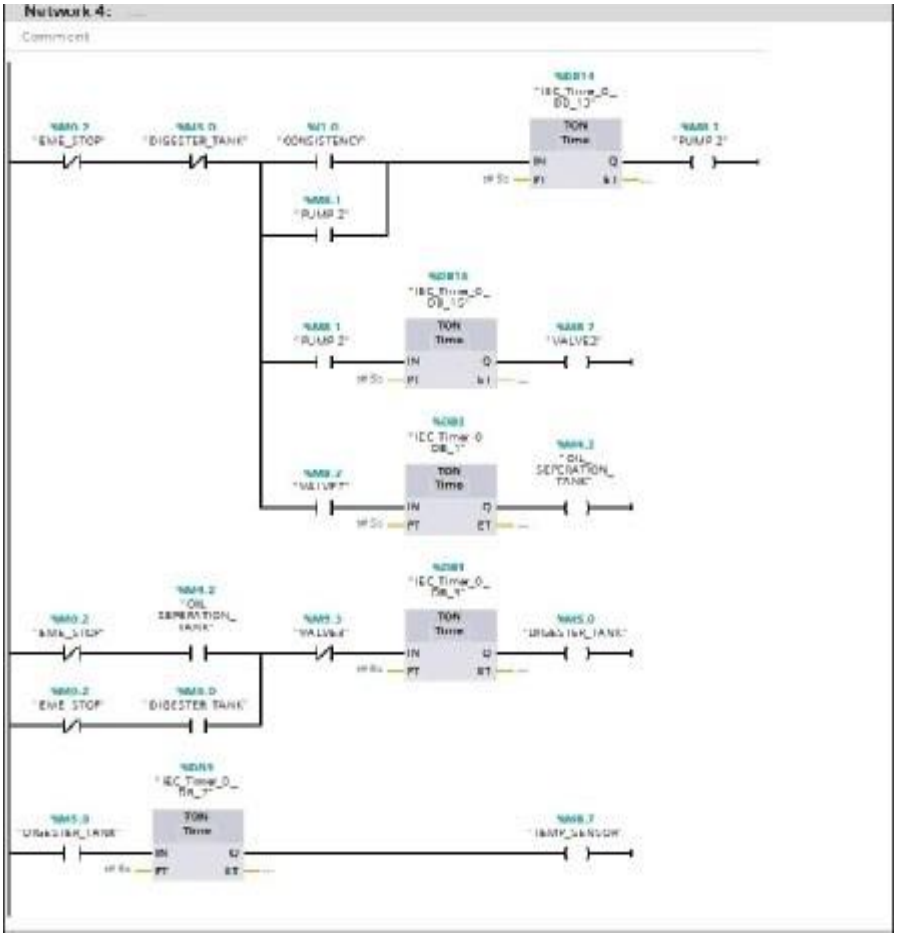

Fig. 3.11: Ladder Logic for Aerobic Digestion

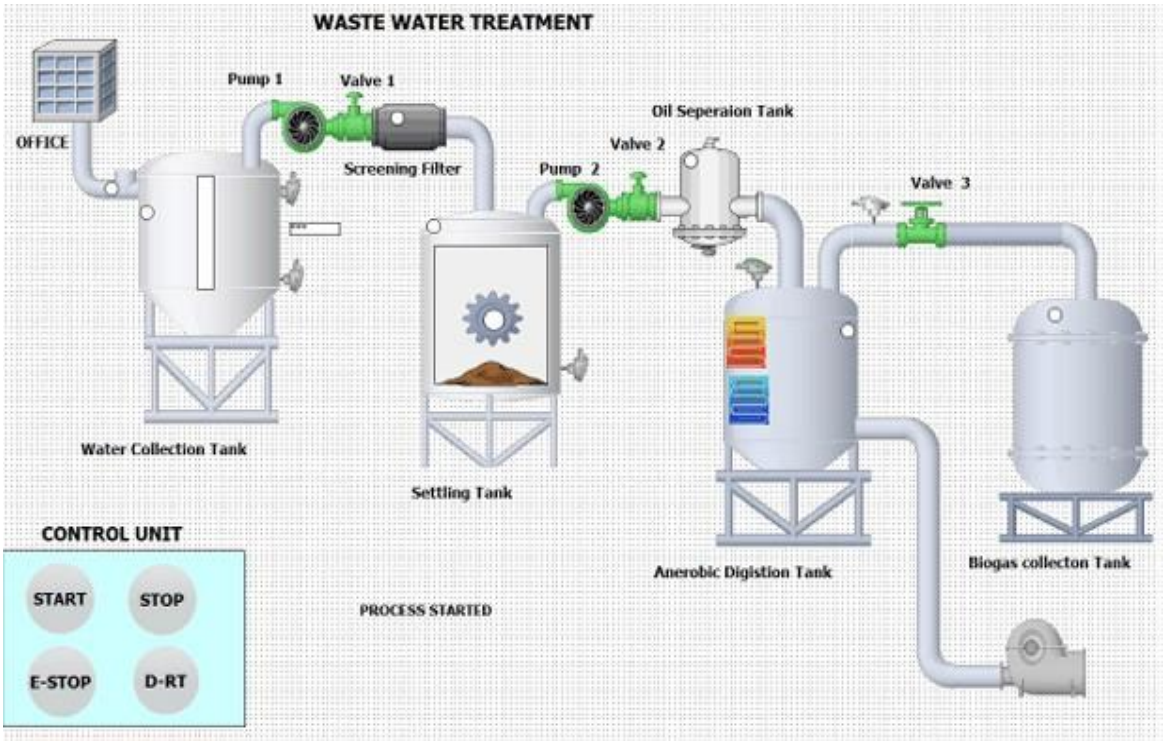

Fig. 3.12: SCADA Visualization for Liquid Waste Processing

IV. RESULT

Figure 5.1 presents the SCADA output for the liquid waste management system, illustrating the full operational pipeline of wastewater treatment in real time. It shows the sequential flow starting from the water collection tank, where incoming wastewater is initially stored and regulated, followed by the screening filter that removes larger suspended solids and debris. The flow then moves into the settling tank, where gravity-based separation allows heavier particles to settle at the bottom. After this primary treatment stage, the partially treated water is directed into the anaerobic digestion tank, where microbial activity breaks down organic matter and contributes to biogas production. Finally, the biogas collection tank is displayed as part of the energy recovery system, highlighting how waste treatment is integrated with renewable energy generation. The SCADA interface continuously monitors levels, flow rates, and system status, ensuring smooth coordination across all stages.

Figure 5.2 Presents the SCADA output for the solid waste management system, illustrating the complete waste segregation and processing workflow. The interface displays the waste separation chamber, dry/wet waste separation unit, conveyor system, capacitive and inductive sensors, and dedicated collection bins for paper, plastic, and metal waste. The SCADA dashboard provides real-time monitoring of sensor inputs, conveyor operation, equipment status, and waste flow, enabling centralized supervision and efficient automated waste segregation.

The simulation results demonstrate that the PLC successfully executed the programmed control logic for waste segregation, liquid waste treatment, and process monitoring. The WinCC SCADA interface provided continuous real-time visualization of equipment status, process flow, and operational parameters, confirming the feasibility of integrating PLC and SCADA technologies for intelligent waste management applications.

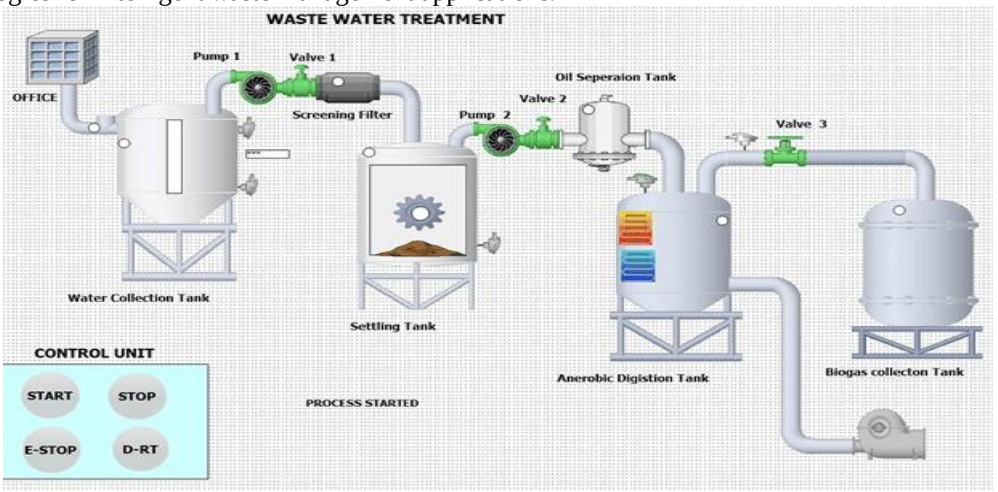

Fig. 4.1: SCADA Visualization for Liquid Waste Management

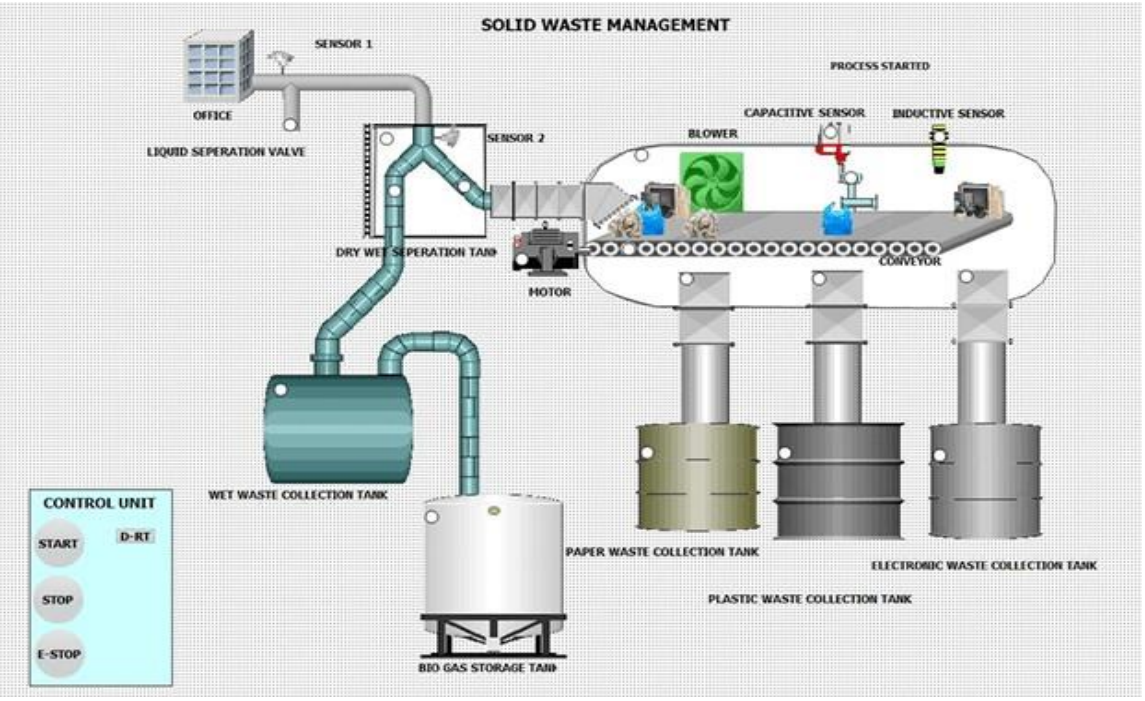

Fig. 4.2: SCADA Visualization for Solid Waste Management

The proposed system offers several advantages:

- Automated waste segregation into wet, dry, and liquid categories
- Reduced human intervention and improved operational safety
- Continuous real-time monitoring via SCADA
- Improved recycling efficiency for plastic, paper, and metal waste
- Renewable energy generation through biogas from organic waste
- Centralized industrial control with scalable system architecture

Although the current work is simulation-based, it demonstrates the feasibility of implementing industrial automation technologies for intelligent waste management systems. Compared to traditional manual systems, the proposed implementation offers improved process accuracy, reduced human intervention, better monitoring capability, and increased industrial efficiency.

V.DISCUSSION

The proposed Smart Waste Management and Energy Recovery System successfully demonstrates the application of PLC and SCADA technologies for automating waste segregation, monitoring, and processing operations. The simulation validates that industrial automation can improve the efficiency and reliability of waste management systems while reducing the need for continuous manual intervention.

The PLC ladder logic effectively controlled the sequence of operations by processing simulated sensor inputs and operating conveyors, pumps, and valves according to predefined conditions. This ensured systematic segregation of waste into wet, dry, and liquid categories and directed each type of waste to its respective processing unit. The sequential control logic improved process coordination and minimized operational errors.

The WinCC SCADA interface provided real-time visualization of the complete system, allowing operators to monitor equipment status, process flow, and alarm conditions through a centralized graphical interface. This enhanced process supervision and enabled quick identification of abnormal operating conditions. The SCADA system also improved operational transparency by displaying process parameters continuously during system execution.

The proposed waste processing methodology supports sustainable resource utilization by directing recyclable dry waste to recycling units, treating liquid waste before disposal or reuse, and utilizing biodegradable wet waste for biogas generation. Although the biogas generation process was included as part of the proposed system architecture and was not experimentally validated, its integration demonstrates the potential for renewable energy recovery from municipal waste.

Compared with conventional waste management systems, the proposed automation-based approach offers several advantages, including reduced manual labour, improved waste segregation accuracy, centralized monitoring, faster process execution, and better utilization of recyclable resources. The modular design also allows future integration of additional sensors, Internet of Things (IoT) devices, and Artificial Intelligence (AI)-based waste classification techniques.

Since the present work was validated through PLC programming and SCADA simulation, future work should focus on developing a physical prototype and evaluating the system under real operating conditions. Practical implementation would enable performance analysis, energy consumption measurement, and long-term reliability assessment, further demonstrating the feasibility of deploying the proposed system in smart cities, educational institutions, industries, and commercial facilities.

VI.CONCLUSION

This paper presented the design and simulation of a Smart Waste Management and Energy Recovery System using PLC and SCADA. The proposed system integrates automated waste segregation, recycling, liquid waste treatment, and biogas generation into a single industrial automation platform. PLC-based control enables reliable process automation, while SCADA provides centralized monitoring and supervisory control.

The simulation results demonstrate that the proposed architecture can improve operational efficiency, reduce manual labour, enhance waste processing accuracy, and support sustainable resource utilization. The system provides an effective framework for future smart city waste management applications. Future work includes implementing a physical prototype, integrating IoT-based remote monitoring, applying artificial intelligence for intelligent waste classification, and performing real-time performance analysis under industrial operating conditions.

REFERENCES

1. Zhang, X., Liu, C., Chen, Y., & Zheng, G., "Source Separation, Transportation, Pretreatment, and Valorization of Municipal Solid Waste," Environmental Development and Sustainability, 2022.
2. Shah, A. V., Srivastava, V. K., Mohanty, S. S., & Varjani, S., "Municipal Solid Waste as a Sustainable Resource for Energy Production," Journal of Environmental Chemical Engineering, 2021.
3. Wang, C., Qin, J., Qu, C., Ran, X., Liu, C., & Chen, B., "A Smart Municipal Waste Management System Based on Deep Learning and Internet of Things," Waste Management, 2021.
4. Heidari, R., Yazdanparast, R., & Jabbarzadeh, A., "Sustainable Design of Municipal Solid Waste Management Systems," Sustainable Cities and Society, 2019.
5. Rodrigues, S., Martinho, G., & Pires, A., "Waste Collection Systems: A Taxonomy," Journal of Cleaner Production, 2016.
6. Yadav, V., & Karmakar, S., "Sustainable Collection and Transportation of Municipal Solid Waste in Urban Centers," Sustainable Cities and Society, 2020.
7. Ebrahimian, F., & Karimi, K., "Efficient Biohydrogen and Advanced Biofuel Coproduction from Municipal Solid Waste through a Clean Process," Bioresource Technology, 2020.
8. Lella, J., Mandla, V. R., & Zhu, X., "Solid Waste Collection/Transport Optimization and Vegetation Land Cover Estimation Using GIS," Sustainable Cities and Society, 2017.